SALES & ENGINEERING DATA

RATIO SERIES:	23:1
FLUID PSI RANGE:	0 – 3690

650492-X43-B

EXTRUSION PUMP

RELEASED: 11-6-98
REVISED: 5-27-10
(REV. 02) S-1062

DIMENSIONAL DATA

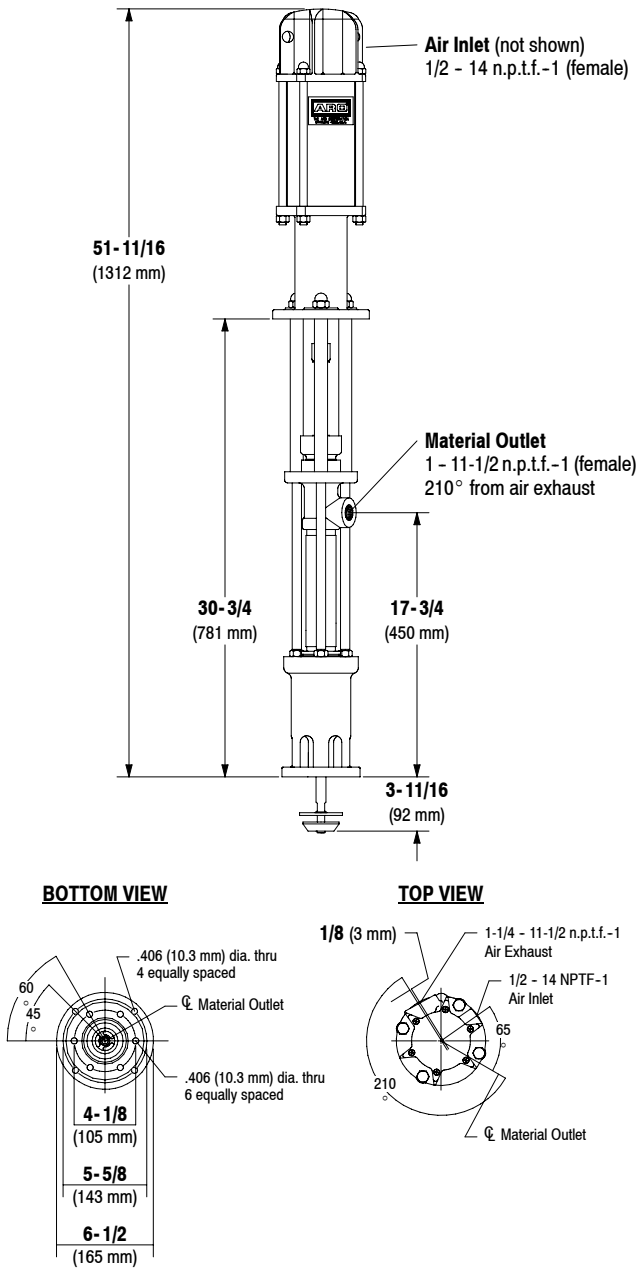

NOTE: Dimensions are shown in inches and (mm), supplied for reference only and are typically rounded up to the nearest 1/16 inch.

SPECIFICATIONS

CONSTRUCTION

Model Series (refer to option chart) 650492-X43-B
Pump Type . . . . . Air Operated, Extrusion, Double Acting Pump
Ratio 23:1
Air Motor 65465-B
- **Motor Repair Kit** 61268
- **Motor Diameter** . . . . . 4-1/4" (107.9 mm)
- **Stroke** . . . . . 6" (152.4 mm)
- **Air Inlet** . . . . . 1/2 – 14 n.p.t.f.-1 (female)
- **Air Exhaust** . . . . . 1-1/4 – 11-1/2 n.p.t.f.-1 (female)

Lower Pump End Series . . . 66266-X43-B
- **Lower Pump Repair Kit** . 637074-X43-B
- **Packing Options:**

3 - Glass Filled PTFE
C - UHMW-PE
G - UHMW-PE / Leather staggered
P - UHMW-PE / PTFE staggered upper • UHMW-PE lower
R - PTFE / UHMW-PE staggered upper • PTFE lower

- **Material Inlet** . . . . . immersed
- **Material Outlet** . . . . . 1 – 11-1/2 n.p.t.f. – 1 (female)

MATERIALS OF CONSTRUCTION

Outlet Body . . . . . Ductile Iron, E Nickel plated
Cylinder . . . . . Carbon Steel, Nickel plated
Plunger . . . . . 17-4 Stainless Steel, Chrome plated
Upper Check . . . . . 440 Stainless Steel
Upper Seat . . . . . 440 Stainless Steel
Lower Check . . . . . 440 Stainless Steel
Lower Seat . . . . . 440 Stainless Steel
Inlet Body . . . . . Ductile Iron, Nickel plated
Weight . . . . . 63.7 lbs (28.9 kgs)

PERFORMANCE

Air Inlet Pressure Range . . . . . 0 – 150 p.s.i. (0 – 10.3 bar)
Fluid Pressure Range . . . . . 0 – 3690 p.s.i. (0 – 254.5 bar)
Max. Rec'd Cycles / Minute . . . 60
Displacement In^3 Per Cycle . . . 6.97
Volume / Cycle . . . . . 3.9 oz. (114.2 ml)
Cycles Per Gallon 33.1
Flow @ 60 Cycles / Minute . . . . 1.8 g.p.m. (6.9 l.p.m.)
Noise Level @ 60 p.s.i. - 40 c.p.m. 80.0 db(A)①

① Tested with 91790 Muffler installed. The pump sound pressure level has been updated to an Equivalent Continuous Sound Level (L_{Aeq}) to meet the intent of ANSI S1. 13-1971, CAGI-PNEUROP S5.1 using four microphone locations.

ACCESSORIES:
66101 Wall Mount Bracket
67187-1 Mounting Post
91790 Silencer

airpumping.co.uk
est 1979
Unit 16, Upminster Trading Park, Warley St., Upminster, Essex, RM14 3PJ, ENGLAND

ARO
Ingersoll Rand
Industrial Technologies
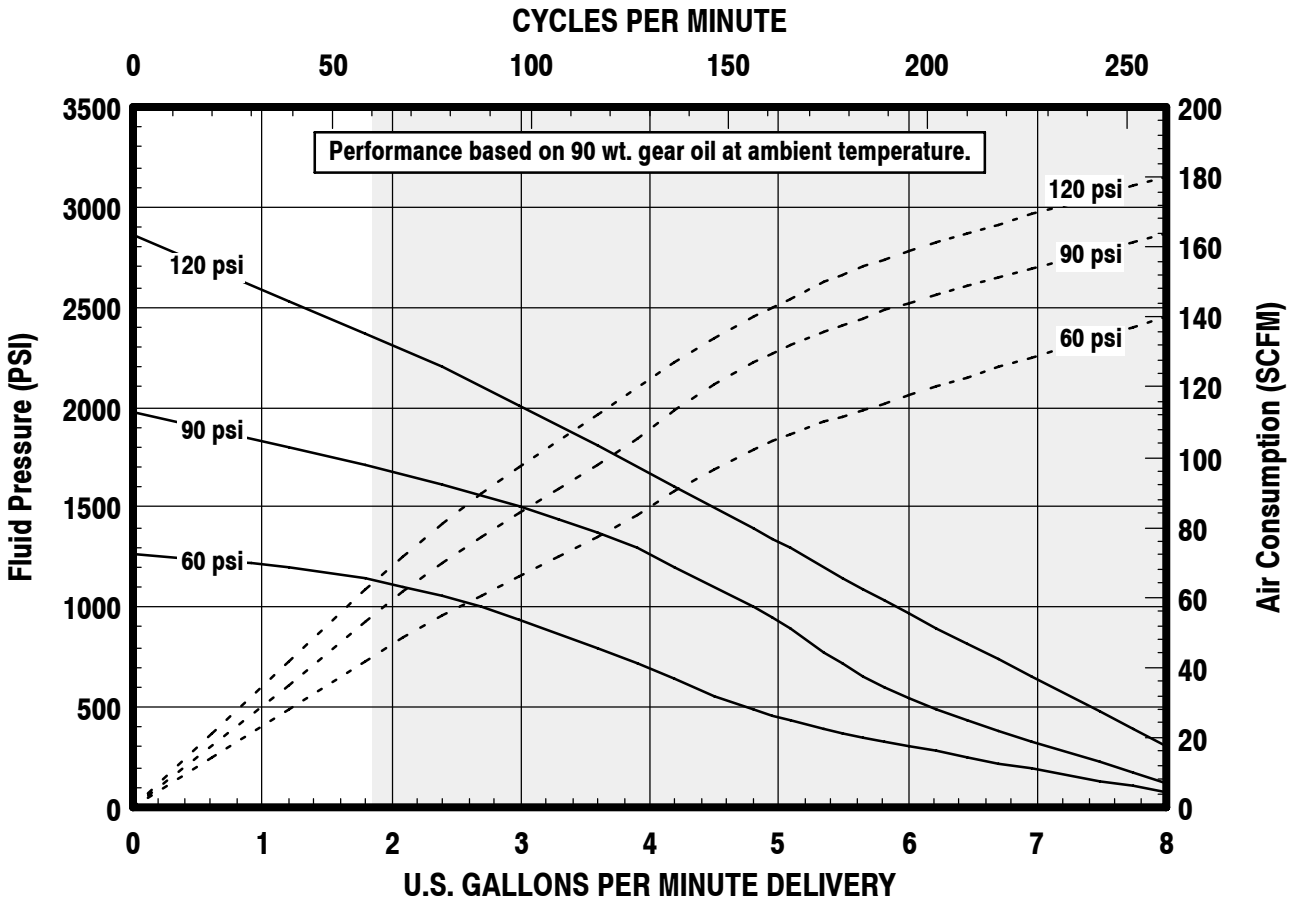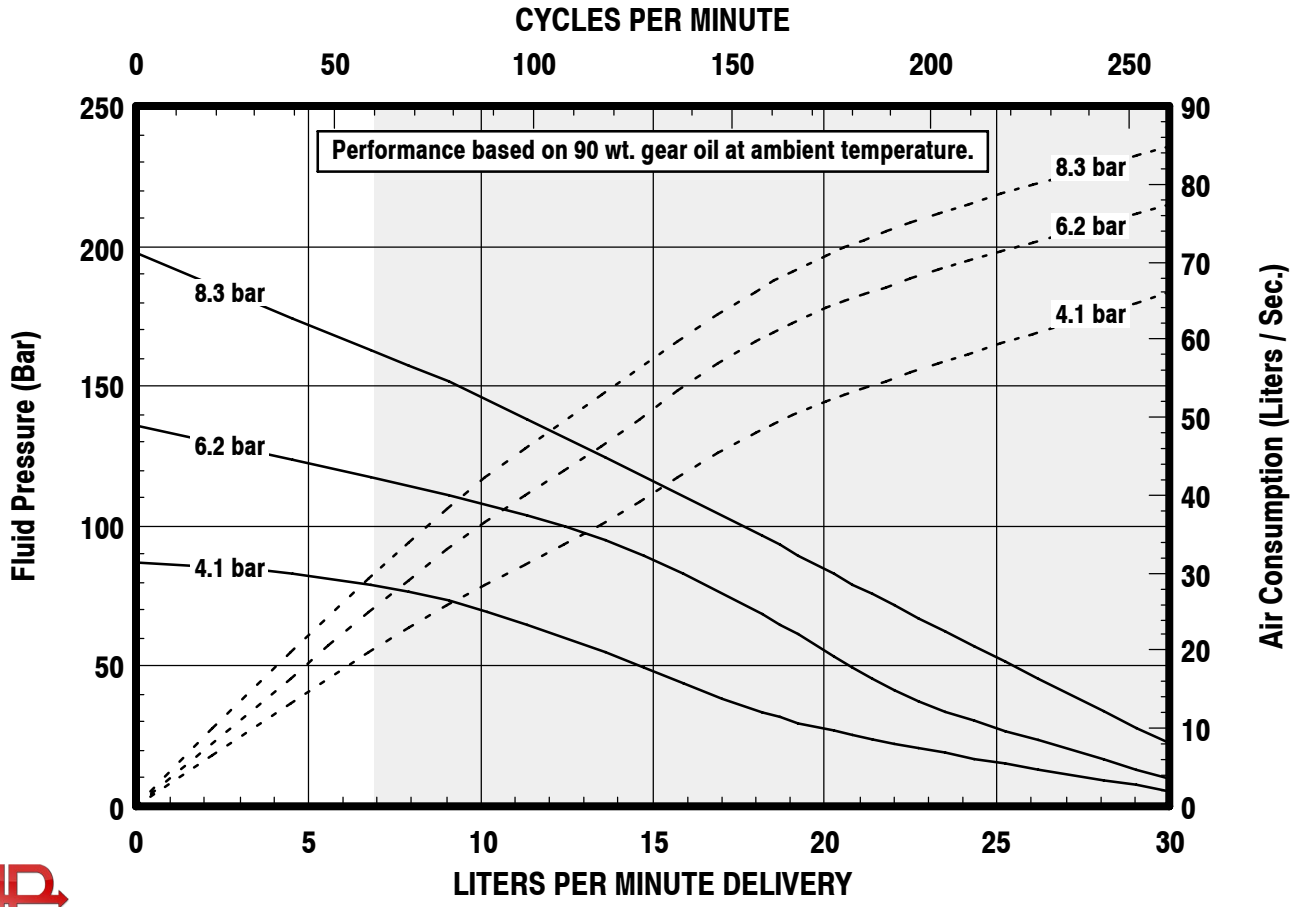
PERFORMANCE CURVES