SALES & ENGINEERING DATA

RATIO SERIES:	1:1
FLUID P.S.I. RANGE:	20 - 120

PF20A-XXX-SXX-B & PF20S-XXX-SXX-B

2" METALLIC FLAP VALVE DIAPHRAGM PUMP

RELEASED: 2-10-05
REVISED: 9-15-11
(REV. 04) S-1342

DIMENSIONAL DATA

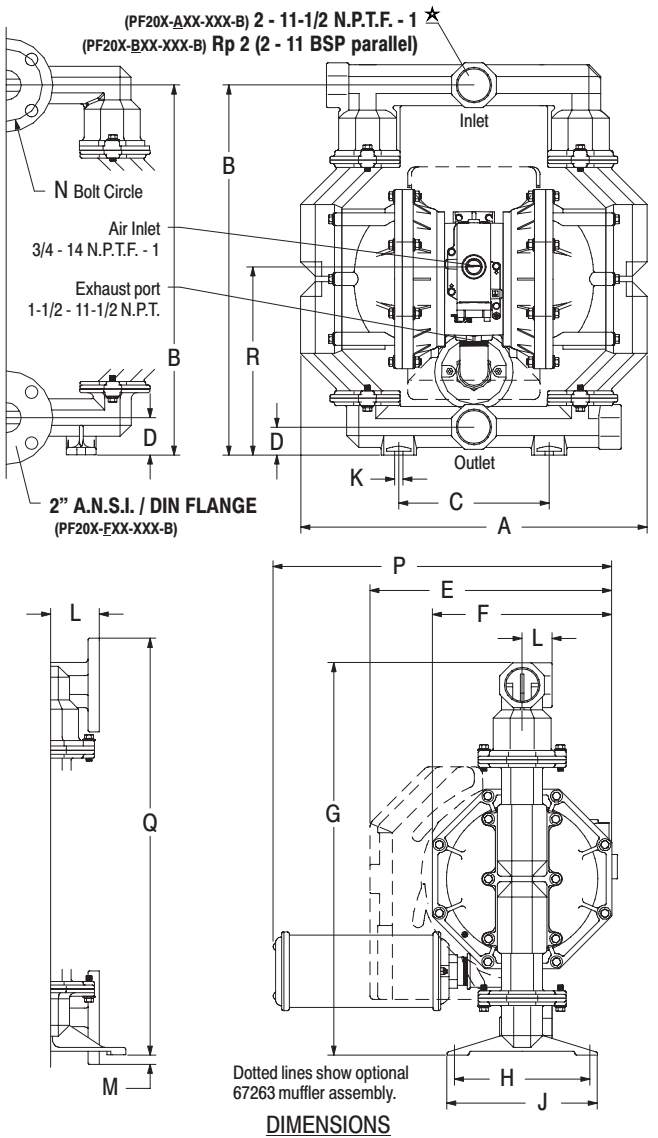

DIMENSIONS

A	23-3/16" (588.8 mm)	G	26-1/4" (666.8 mm)	M	5/8" (15.9 mm)
B	24-3/4" (628.7 mm)	H	9-1/16" (230.2 mm)	N	4.834" (122.8 mm)
C	10-1/16" (255.6 mm)	J	10-1/16" (255.6 mm)	P	21-5/8" (548 mm)
D	see below	K	9/16" (14.3 mm)	Q	27-7/8" (708.0 mm)
E	16-3/16" (411.2 mm)	L	see below	R	see below
F	12" (304.8 mm)				

	"D"	"L"	"R"
PD20X-XAX-SXX-B	1-7/8" (47.6 mm)	2" (50.8 mm)	12-19/32" (319.9 mm)
PD20X-XCX-SXX-B	1-7/8" (47.6 mm)	2" (50.8 mm)	12-19/32" (319.9 mm)
PD20X-ASX-SXX-B	2-1/2" (63.5 mm)	2-3/32" (53.0 mm)	13-1/4" (336.6 mm)
PD20X-BSX-SXX-B	2-1/2" (63.5 mm)	2-3/32" (53.0 mm)	13-1/4" (336.6 mm)
PD20X-FSX-SXX-B	2-1/2" (63.5 mm)	3-1/4" (82.6 mm)	13-1/4" (336.6 mm)

NOTE: ★ Side Discharge Ports are not available on PX20X-XSX-X-B Models.
Dimensions are shown in inches and (mm), supplied for reference only and are typically rounded up to the nearest 1/16 inch.

SPECIFICATIONS

CONSTRUCTION

Model Series PF20A-XXX-SXX-B
. . . . . PF20S-XXX-SXX-B
Pump Type Metallic, Air Operated, Flap Valve, Double Diaphragm
Ratio 1:1
Material Inlet / Outlet (female)
PF20X-AXX-SXX-B . . . . . 2 - 11-1/2 N.P.T.F. - 1
PF20X-BXX-SXX-B . . . . . Rp 2 (2 - 11 BSP parallel)
PF20X-FXX-SXX-B . . . . . 2" A.N.S.I. / DIN Flange
Air Inlet (female) . . . . . 3/4 - 14 N.P.T.F. - 1
Air Exhaust (female) . . . . . 1-1/2 - 11-1/2 N.P.T.
Weight . . PF20A-XAX-SXX-B . . . . . 97.3 lbs (44.2 kgs)
PF20A-XCX-SXX-B . . . . . 166.2 lbs (75.4 kgs)
PF20A-ASX-SXX-B . . . . . 166.0 (75.3 kgs)
PF20A-BSX-SXX-B . . . . . 166.0 (75.3 kgs)
PF20A-FSX-SXX-B . . . . . 177.1 (80.3 kgs)
(add 28.9 lbs [13.1 kgs] for Stainless steel air motor section)
Air Section Service Kit 637421
Fluid Section Service Kit 637310-XX
Major Air Valve Assembly 637374-X

PF20X-XXX-S X X -B
637310 - X X
Diaphragm Material
Flap Material

EXAMPLE: Model # PF20A-AAP-SAA-B
Fluid Section Service Kit is 637310-AA

PERFORMANCE

Air Inlet Pressure Range . . . . . 20 - 120 p.s.i. (1.4 - 8.3 bar)
Maximum Material Inlet Pressure . . . 10 p.s.i. (0.69 bar)
Fluid Pressure Range . . . . . 20 - 120 p.s.i. (1.4 - 8.3 bar)
Maximum Flow Rate . . . . . 172 g.p.m. (651 l.p.m.)
Maximum Particle Size . . . . . 2" dia. (50 mm) semi-solids
Maximum Temperature Limits (diaphragm / ball / seal material)
E.P.R. / EPDM . . . . . -60° to 280° F (-51° to 138° C)
Nitrile . . . . . 10° to 180° F (-12° to 82° C)
Polyurethane . . . . . 10° to 150° F (-12° to 66° C)
Santoprene® . . . . . -40° to 225° F (-40° to 107° C)
PTFE . . . . . 40° to 225° F (4° to 107° C)
Viton® . . . . . -40° to 350° F (-40° to 177° C)
Displacement / Cycle @ 100 p.s.i. . . 1.4 gal. (5.3 lit.)
Noise Level @ 70 p.s.i. - 60 c.p.m.① . 85.0 db(A)②

① Tested with 67263 muffler assembly installed.
② The pump sound pressure level has been updated to an Equivalent Continuous Sound Level (L_{Aeq}) to meet the intent of ANSI S1. 13-1971, CAGI-PNEUROP S5.1 using four microphone locations.

ACCESSORIES:
66312 Air Line Connection Kit
67263 Continuous Muffler Assembly
94117 Int. Muffler

airpumping.co.uk
est 1979
Unit 16, Upminster Trading Park, Warley St., Upminster, Essex, RM14 3PJ, ENGLAND

ARO
Ingersoll Rand
Industrial Technologies
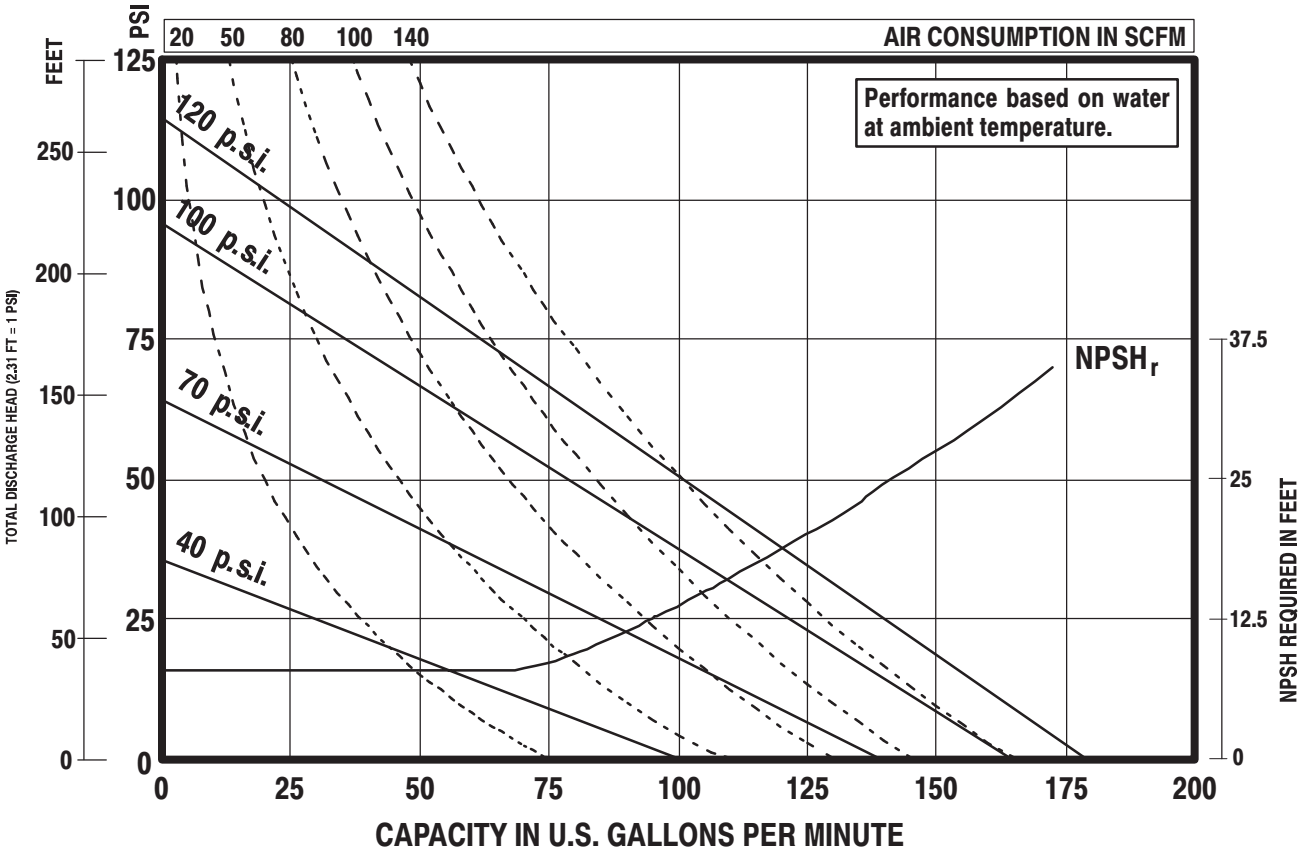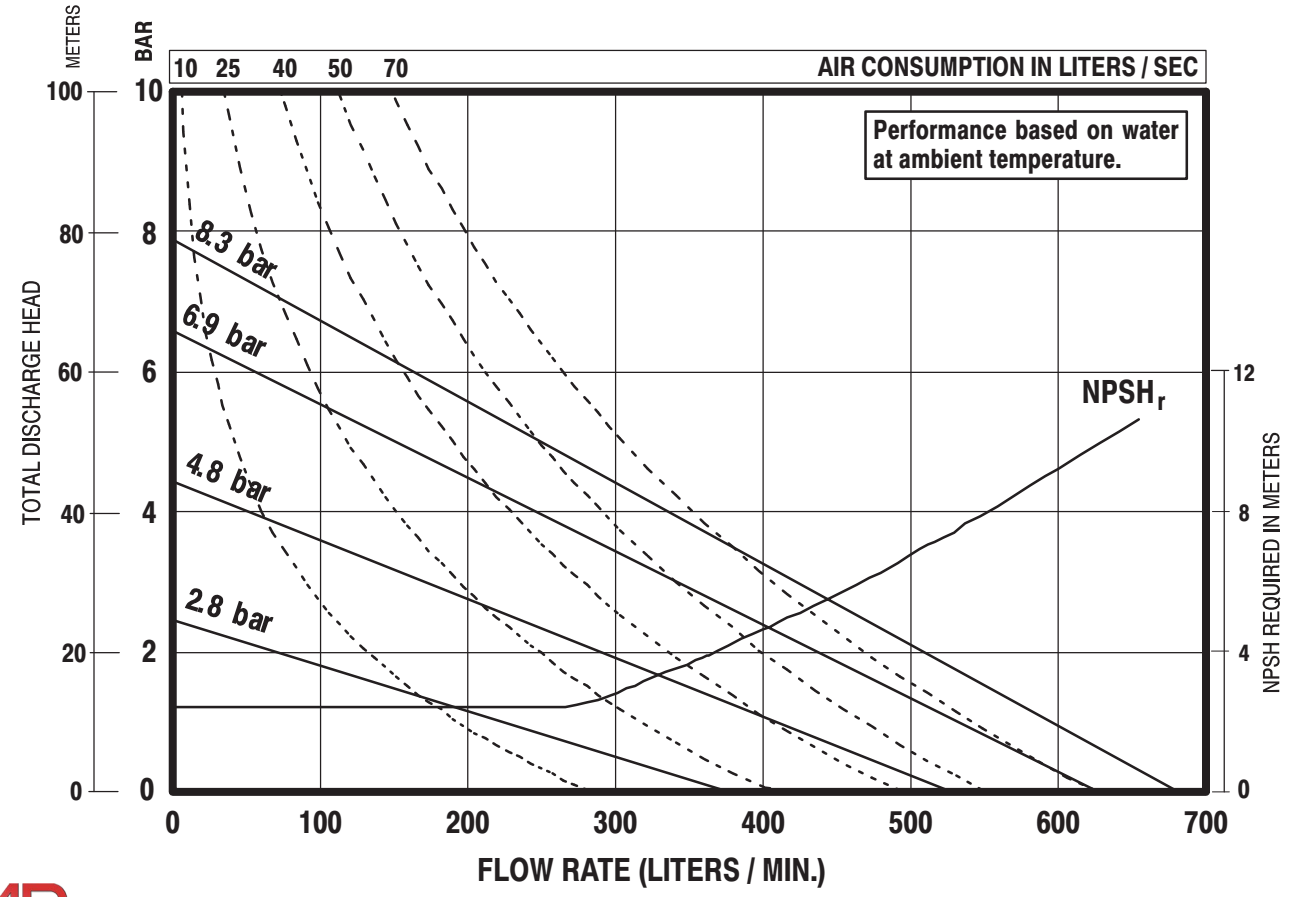
PF20A-XXX-XXX-B / PF20S-XXX-XXX-B 2" METALLIC FLAP VALVE DIAPHRAGM PUMP